USED ON: 2912-6001 & SF2915-6001

CAD GENERATED DRAWING	DCN CONTROLLED DOCUMENT	DWG.NO. 300-80-065

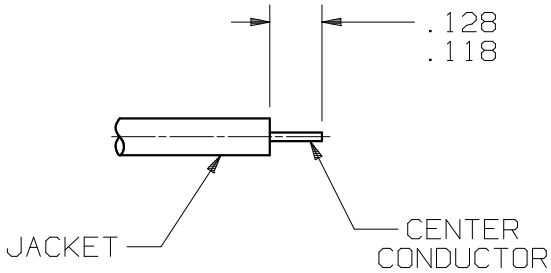

STEP 1

TRIM INSULATOR AND JACKET TO DIMENSIONS SHOWN.

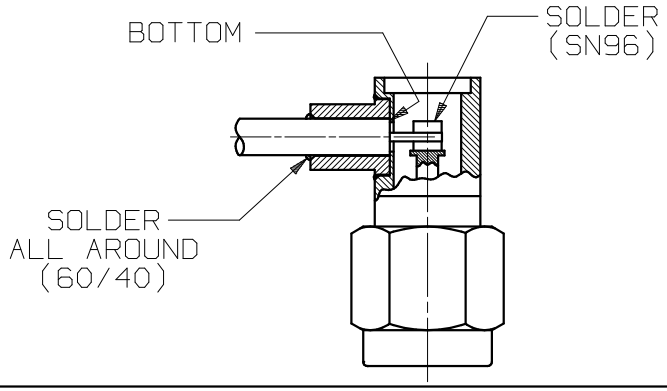

STEP 2

ASSEMBLE CABLE INTO CONNECTOR ASSY, BEING CERTAIN CABLE CENTER CONDUCTOR IS PROPERLY POSITIONED INTO CONTACT SLOT, UNTIL JACKET BOTTOMS IN BODY. SOLDER CABLE TO CONNECTOR ASSEMBLY USING 60/40 SOLDER.
SOLDER CABLE CENTER CONDUCTOR TO CONTACT, USING SN96 SOLDER.

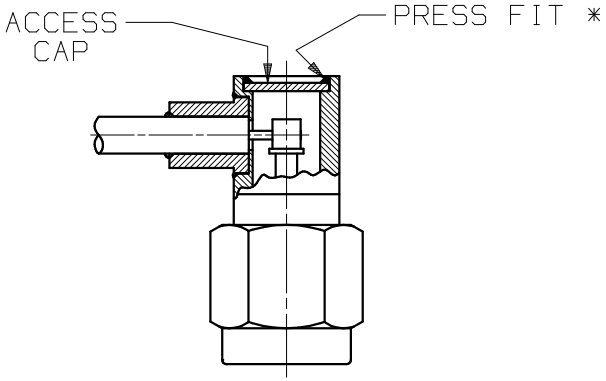

STEP 3

ASSEMBLE ACCESS CAP AND PRESS IN PLACE.

* GOLD PLATED CAPS MAY BE SOLDERED AS AN OPTION

SYM.	DESCRIPTION	DATE	APPR.
B	REV. DCN F10209	10/85	ND
C	REV. DCN 20062	5/91	RDF
D	REV. DCN 22936	10/96	JM
E	REV. DCN 24635	08/98	SW
F	REV. DCN 28004	02/02	SW

UNLESS OTHERWISE SPECIFIED:
1) ALL DIMENSIONS ARE AFTER PLATING.
2) BREAK CORNERS & EDGES .005 R.MAX.
3) CHAM. 1st & LAST THDS.
4) SURFACE ROUGHNESS 63 √ MIL-STD-10.
5) DIAS. ON COMMON CENTERS TO BE CONCENTRIC WITHIN .004 T.I.R.
6) REMOVE ALL BURRS.

REDRAWN: DWC 10/24/96
CHECKED:
APPROVED: DGG 1/77

DIMENSIONS ARE IN INCHES
TOLERANCES:

DECIMALS	FRACTIONAL	ANGULAR
.X ±.030	±1/64	X° ±1°0′
.XX ±.015		X°X′ ±15′
.XXX ±.005		

MATERIAL: N/A
FINISH: N/A
□″ AREA: N/A

SIZE	CAGE NO.	SCALE
A	95077	2X

SV Microwave, Inc.
2400 Centrepark West Drive, Suite 100
West Palm Beach, FL 33409

TITLE: CABLE ASSEMBLY INSTR. FOR SEMI-RIGID CABLE TO SMA RIGHT ANGLE PLUG

DWG.NO. 300-80-065