K&E 10 7155 2-72 3289-

300-80-083

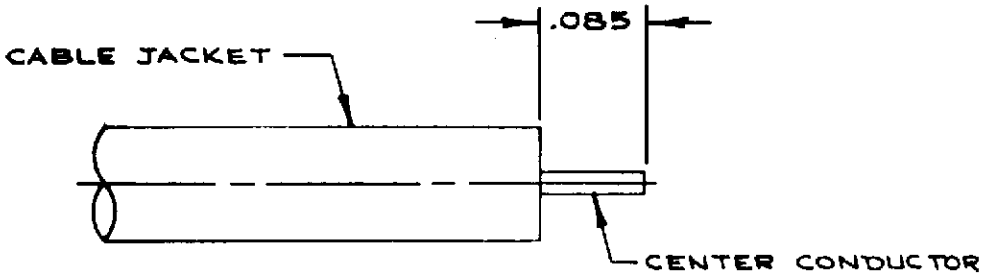

1. TRIM CABLE JACKET AND DIELECTRIC TO DIM. SHOWN. DO NOT NICK CENTER CONDUCTOR.

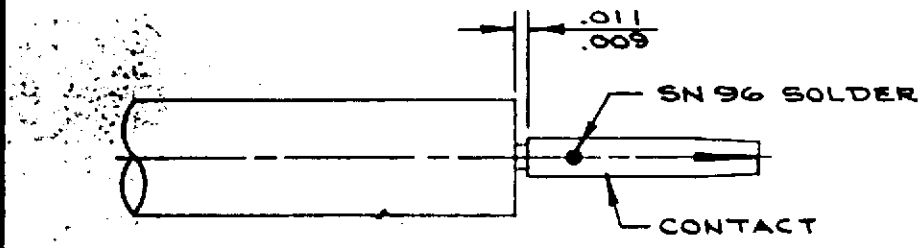

2. SOLDER CONTACT TO CENTER CONDUCTOR, TO .011/.009 GAP, USING SN 96 SOLDER. REMOVE EXCESS SOLDER.

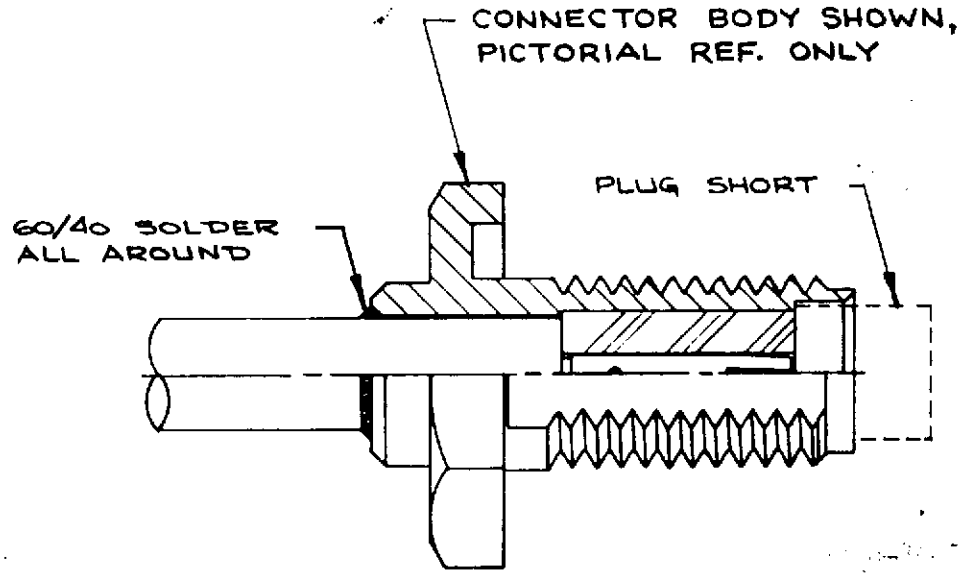

3. RECOMMEND USING PLUG SHORT AT INTERFACE. INSERT CABLE INTO CONNECTOR ASSEMBLY, UNTIL IT BOTTOMS ON INSULATOR. USING 60/40 SOLDER, SOLDER CABLE IN PLACE. REMOVE EXCESS SOLDER.

SIMILAR TO 300-80-366

SYM	DESCRIPTION	DATE	APPR.
—	REL. F-05703	3-77	DGG
A	REV. F-6131	11/4/77	DGG

UNLESS OTHERWISE SPECIFIED
1. REMOVE ALL BURRS
2. BREAK ALL CORNERS & EDGES .005 R MAX
3. CHAMFER 1ST & LAST THREADS 45°
4. SURFACE ROUGHNESS 63 ✓ MIL-STD-10
5. DIAMETERS ON COMMON CENTERS TO BE CONCENTRIC WITHIN — T.I.R.
6. ALL DIMENSIONS ARE AFTER PLATING

DIMENSIONS ARE IN INCHES
TOLERANCES

DECIMALS	FRACTIONAL	ANGULAR
.X ± .030	± 1/64	X° ± 1°0'
.XX ± .015		
.XXX ± .005		X°X' ± 15'

DRAWN NL DATE 3-3-77
CHECKED DATE
APPROVED DATE 3-4-77

SOLITRON/MICROWAVE
PORT SALERNO, FLORIDA

REF. SF2946-6021, 2932-6001, 2922-6007, 2926-6001

MATERIAL #
FINISH #

TITLE
CABLE ASSEMBLY INSTRUCTIONS

SCALE	CODE IDENT. NO.	SIZE	DRAWING NO.
#	95077	A	300-80-083